Foster Hoods

Ghost 48” - **2451 946**

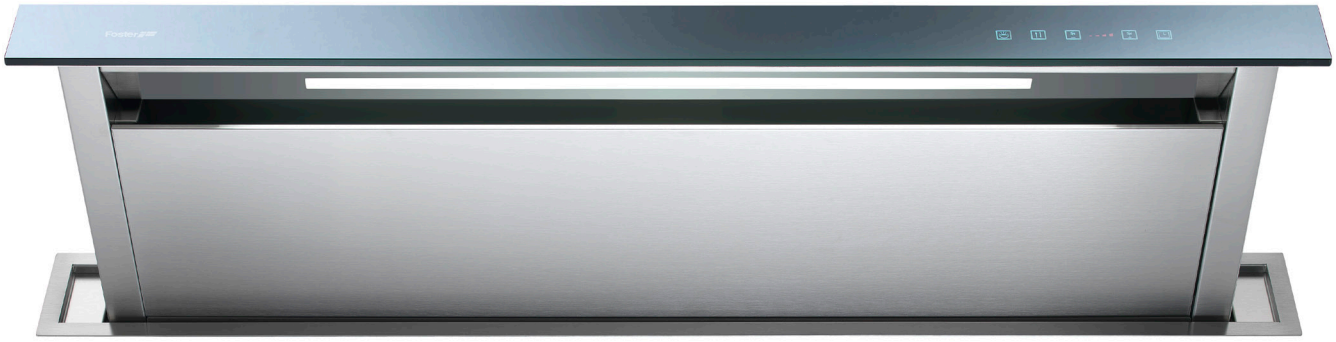

Model	**Ghost 48”**
Hood Type	Table suction hood
Hood finishing	Satin finish AISI 304 Stainless Steel + Black glass
Dimensions	46 1/4” x 4 23/32”
control type	Touch control
Speed	4 speed
Grease filters	2 filters in anodized aluminium
Charcoal filters	optional
Lighting	1x15.5 W LED Strip
Delay off timer	yes
Light switch	yes
Air Outlet	ø 5 29/32"
Motor	external motor
Electrical Supply:	120VAC - 60Hz
Overmount installation Cut Out:	44 61/64” x 3 15/16”
Flush-mount installation Cut Out:	see drawing

accessories	
charcoal filters	N°1 kit cod. 9700 723

Certifications	**CSA certified for US & Canada**

Cut-out

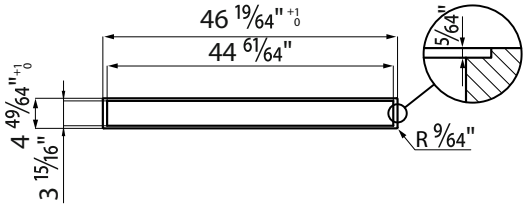

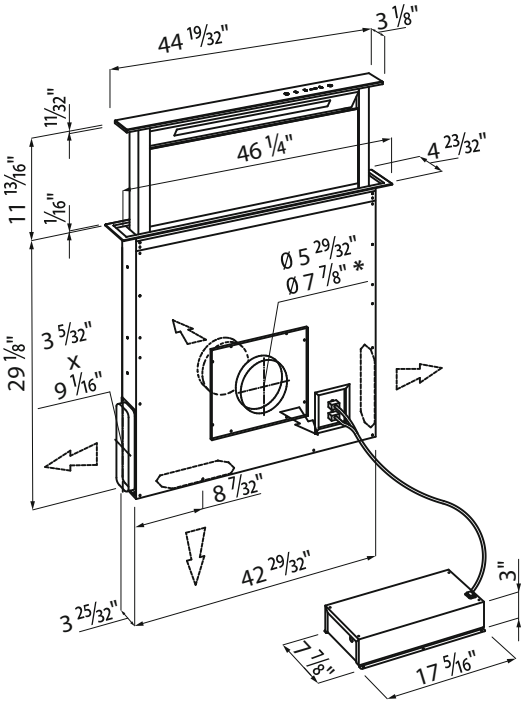

* accessory outlet Ø 7 7/8"

FOSTER MILANO INC.
1801 NE 123RD STREET, SUITE 314
NORTH MIAMI, FLORIDA 33181
info@foster-us.com
www.foster-us.com

Foster
kitchen appliances