GROHE PLUS

Four-Hole Bathtub Faucet with Handshower

MODEL # 29307EN3

Pure Freude an Wasser

GROHE

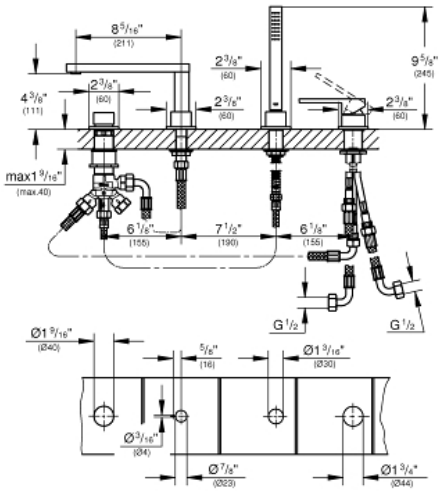

Product Description:
GROHE PLUS
Four-Hole Bathtub Faucet with Handshower

Standard Specification:
- **GROHE SilkMove** 1.4" (35 mm) ceramic cartridge
- With temperature limiter
- **GROHE StarLight** finish
- Pre-assembled spout laminar mousseur
- Single lever valve operating element
- Metal lever handle
- Bath/shower diverter
- Hand shower Euphoria Cube 1.75 gpm (6.6 l/min)
- 79" (2000mm) metal shower hose
- Stainless steel flex lines
- Connection for shower hose
- Check valve included to prevent backflow
- Can be used with 29 037 001
- Min. recommended pressure: 15 psi (1.0 bar)

Color:
❑ 29307EN3 Brushed Nickel InfinityFinish