NOTES:

(N1) 1. FIT / FORM / FUNCTION SHALL FOLLOW PS-E.008.

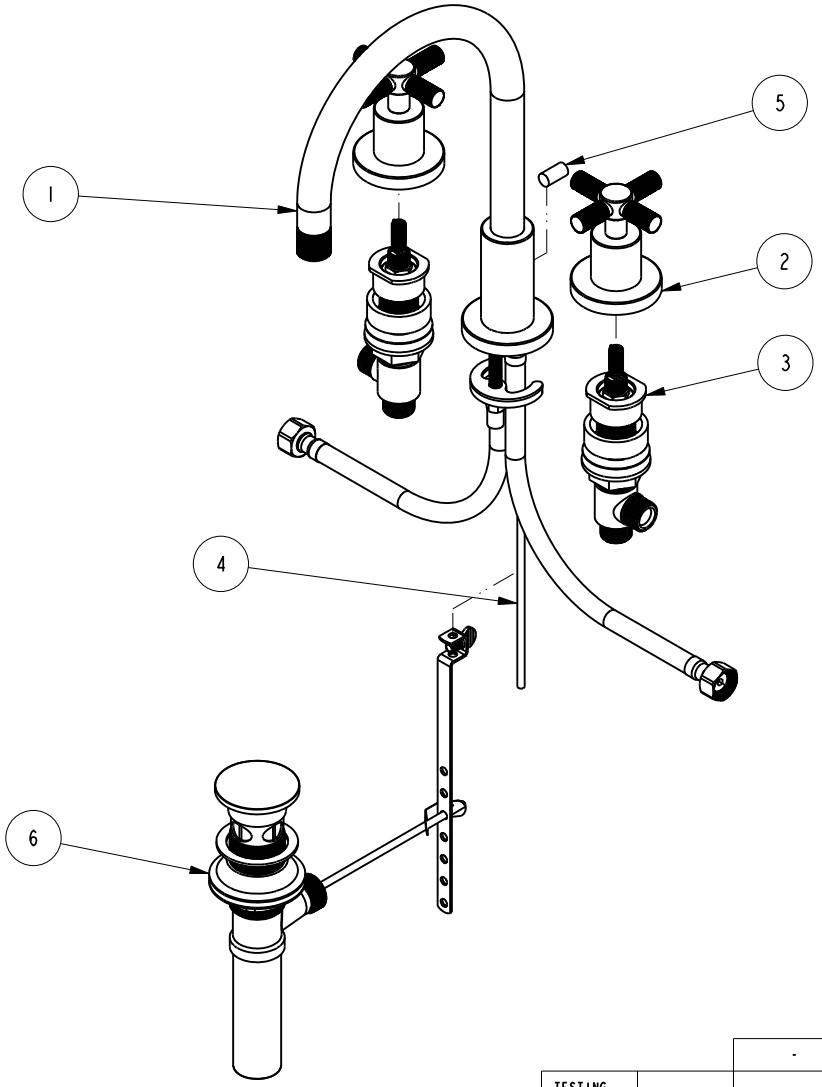

BILL OF MATERIAL (CURRENT LEVEL)

ITEM	PT/ASSY	DESCRIPTION	TYPE	QTY.
1	3-691	W/S SPOUT ASM	ASSEMBLY	1
2	3-693	CROSS HANDLE W/ESC.	ASSEMBLY	2
3	1-676	W/S VALVE INSTALLATION	ASSEMBLY	1
4	10288	3/16" POP UP ROD	PART	1
5	10827	POP-UP KNOB	PART	1
6	325	POP UP ASSEMBLY	ASSEMBLY	1

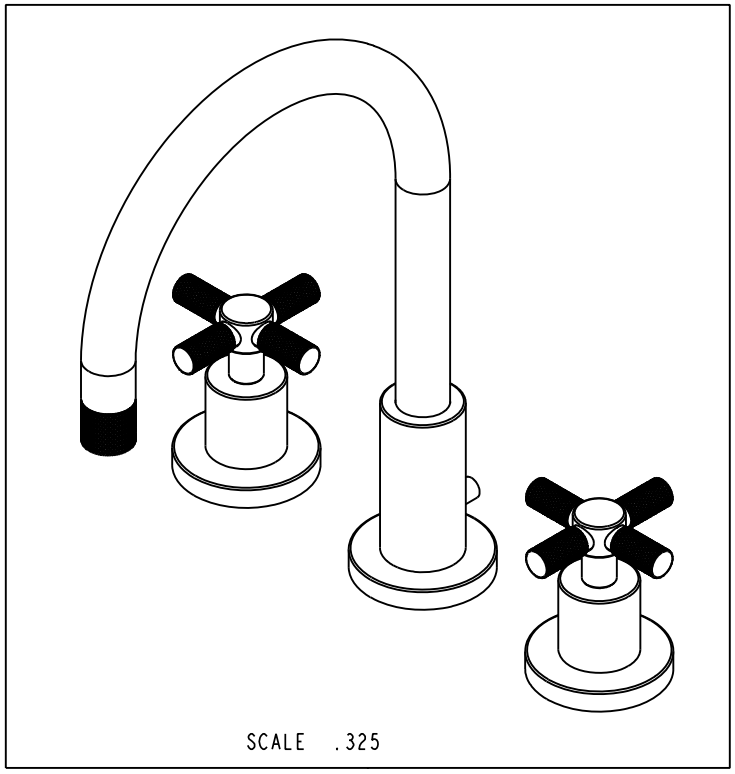

SCALE .325

George Bazan Digitally signed by George Bazan Date: 2020.07.06 14:44:24 -07'00'

ZONE	REV	DESCRIPTION	DATE	APPROVED
-	-	EN-4115	03/27/20	J.M.

COPYRIGHT 2005 BRASSTECH, INC. THESE DRAWINGS AND THE DESIGNS DEPICTED HEREIN ARE THE PROPRIETARY PROPERTY OF BRASSTECH. ANY USE OR REPRODUCTION IS SUBJECT TO THE EXPRESS APPROVAL OF BRASSTECH. UNAUTHORIZED USE IS STRICTLY PROHIBITED. ALL RIGHTS RESERVED.

		-	-
TESTING	-	-	-
ASSEMBLY	-	-	-
PLATING	-	-	-
POLISHING	-	NEXT ASSY	USED ON
MACHINING	-	APPLICATION	
TOOLING FIXTURE #		REMOVE ALL BURRS AND SHARP EDGES	

UNITS ARE: INCHES [MM]
TOLERANCES ARE:

FRACTIONS	DECIMALS	ANGLES
±1/16"	.X ±.1 [2,5]	±1°
	.XX ±.06 [1,5]	

(X.XXX) DENOTES CRITICAL DIMS.
ALL THREADS ARE CRITICAL

DRAWN	JINSON	03/27/20
CHECKED	J.M.	03/27/20
APPROVED	J.M.	03/27/20

BRASSTECH INCORPORATED
2001 CARNEGIE AVE.
SANTA ANA, CA 92705
(949) 417-5207

WIDESPREAD FAUCET

DWG NO. 3300 REV -

SCALE .200 REF. - SHEET 1 OF 2

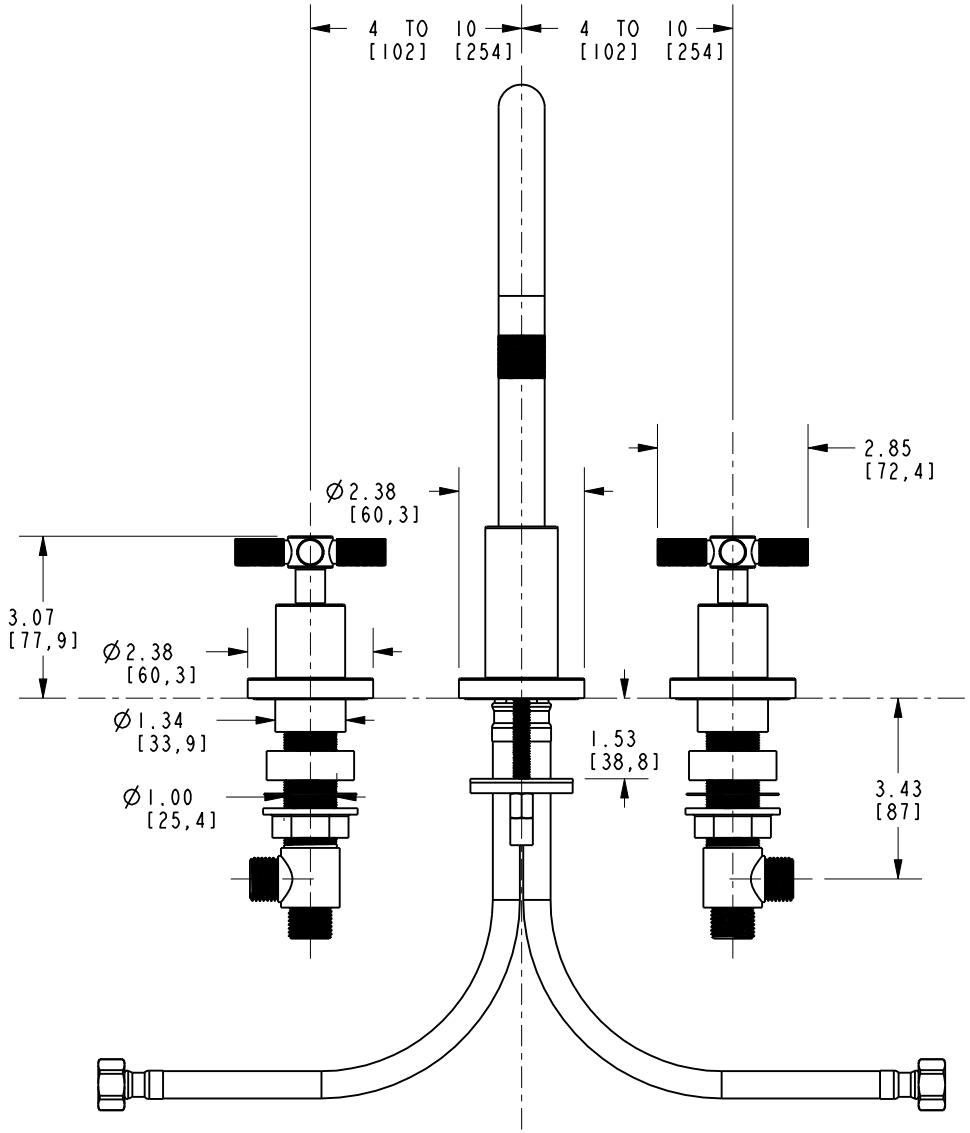

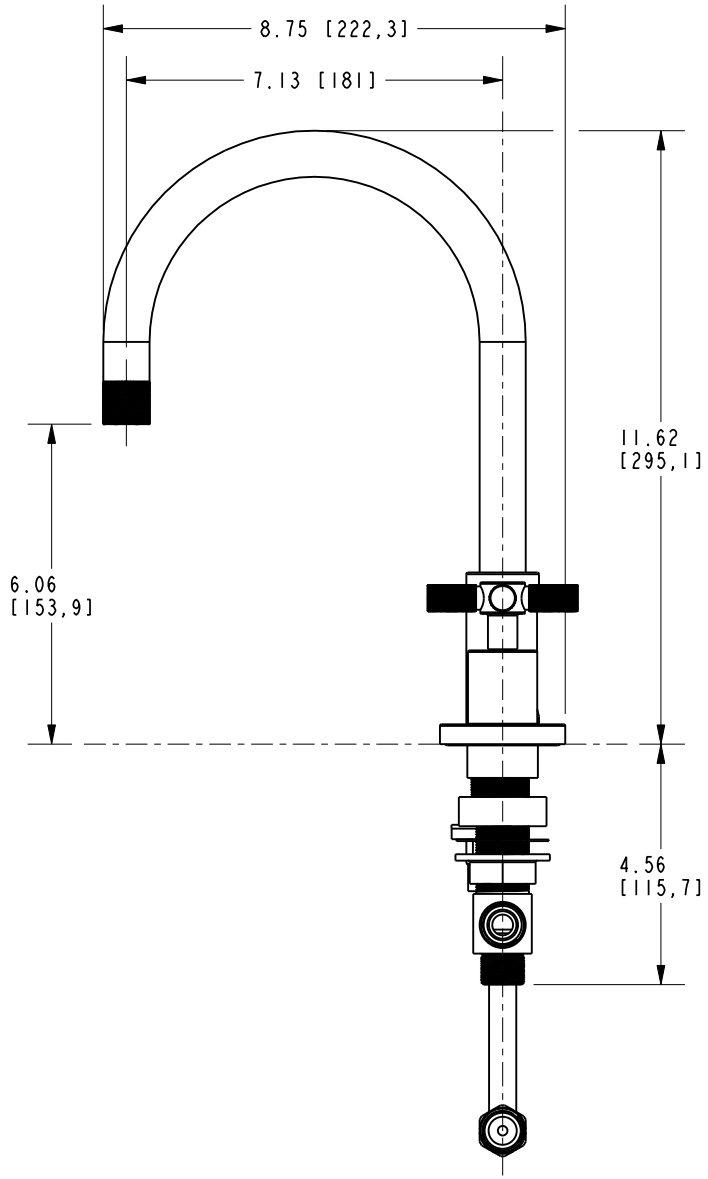

BRASSTECH
INCORPORATED

2001 E. CARNEGIE AVE.
SANTA ANA, CA 92705
(949) 417-5207

DWG NO.	REV
3300	-

SCALE	REF.	SHEET
.275	-	2 OF 2