SPECIFICATION SHEET

OLYMPIA

i2 SINGLE HANDLE LAVATORY FAUCET

Model #: _____

Specific Features: _____

Project Name: _____

Submitted For: _____

Date: _____

- Lever Handle
- 4-3/4" Reach, 2-1/2" From Deck to Aerator
- Ceramic Disc Cartridge
- 1-Hole Installation
- Brass Pop-Up Drain Assembly
- Easy-Install 18" Flex Supply LInes With 3/8" Connections
- With 1.2 GPM Flow Rate

L-6052 SHOWN **ADA**

Model #	Features	Finish	
L-6052*		CP	
L-6052-BN*		PVD BN	
L-6052B	Builder Tract Pack	CP	
L-6052B-BN	Builder Tract Pack	PVD BN	

* Aerator limited to 1.2 GPM Flow Rate
* E0.5 - 0.5 GPM Flow Rate Aerator Available upon request

Olympia products are engineered and manufactured to meet the following standards and codes:

ASME A112.18.1
ANSI A117.1
IAPMO LISTED
ANSI / NSF 61, SECTION 9
CONTAINS NO MORE THAN 0.25% WEIGHTED AVERAGE LEAD CONTENT

WaterSense Meets EPA Criteria
Certified by IAPMO R&T

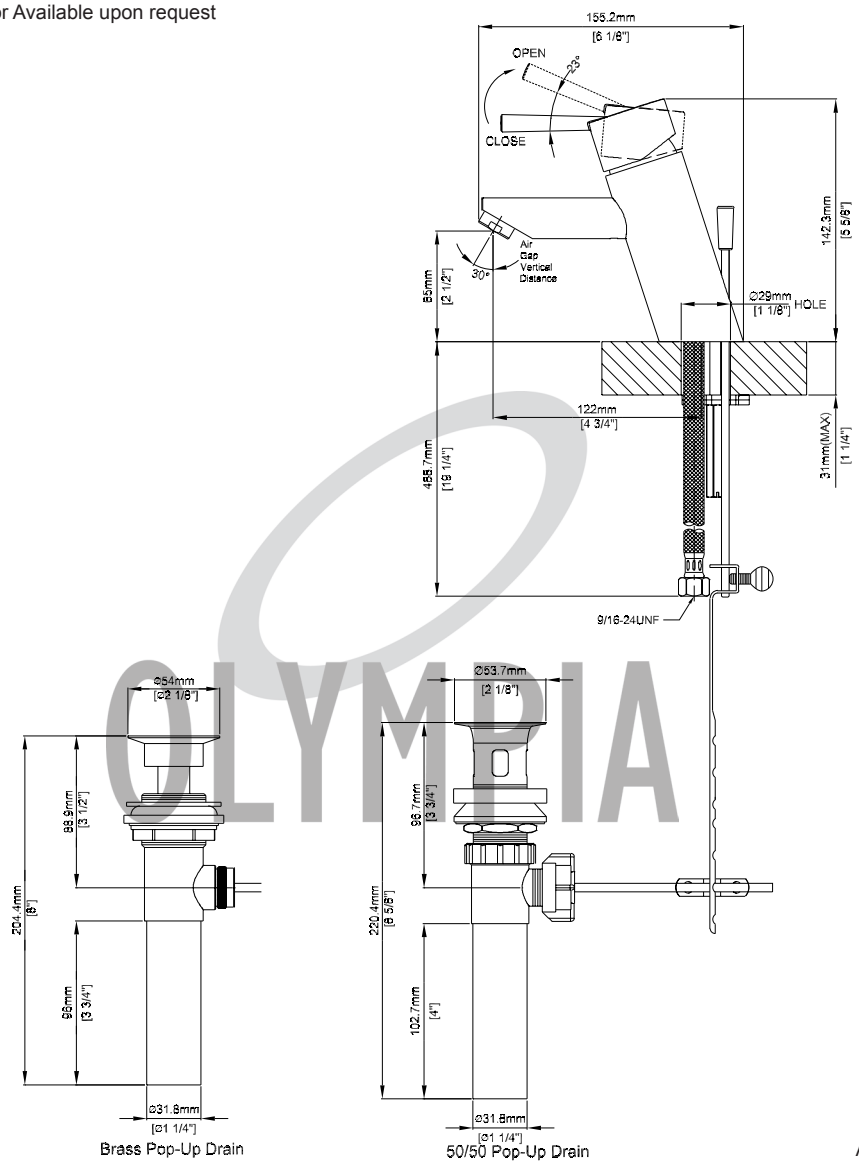

Commerce, CA
www.olympiafaucets.com
Olympia Faucets, Inc. © 2017
A Pioneer Industries Inc. Brand
DMSPL-6052/REV. 11.17