PRODUCT SPECIFICATIONS

Oct 2016

Waterbridge Lav Faucet with Waterfall Spout
WB-LAV-DM-WF-S

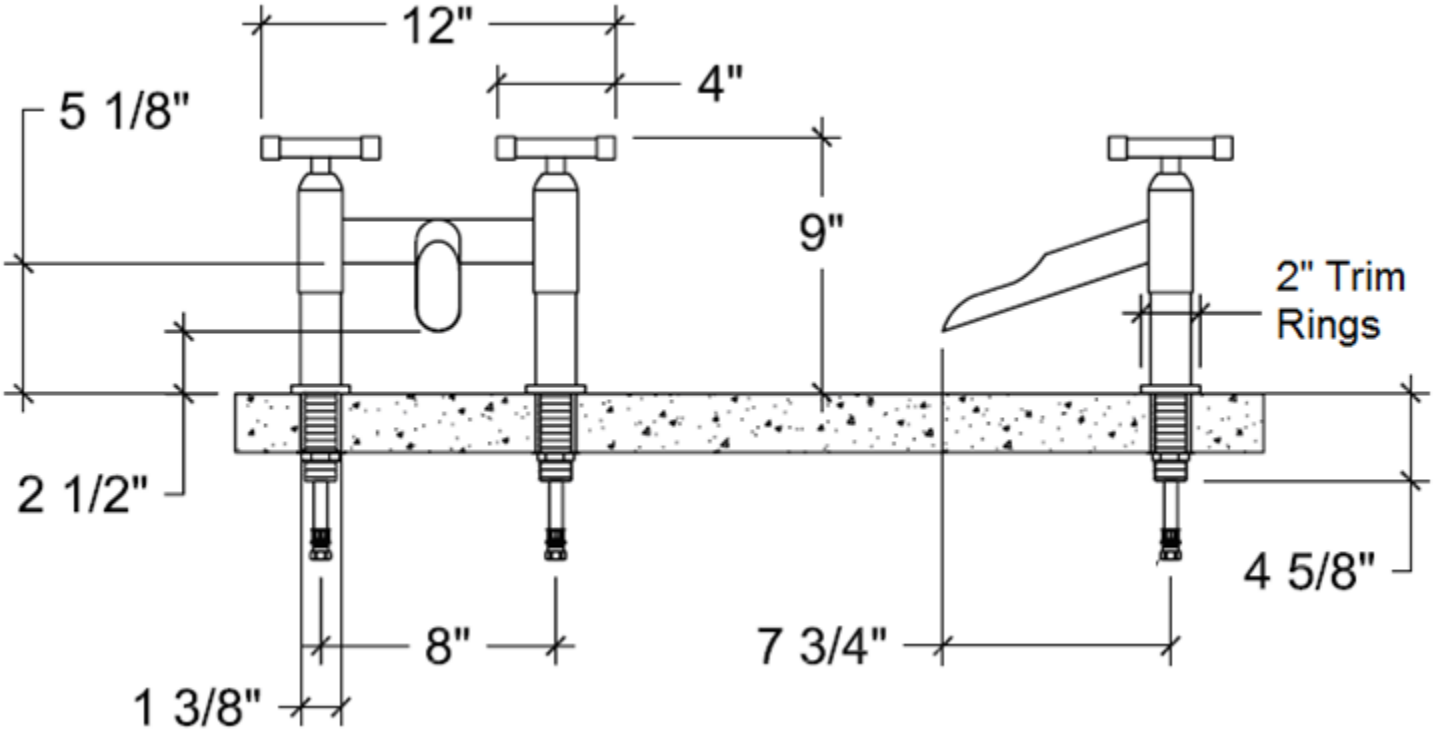

- ADA Compliant
- Includes Flip-Top Drain w/o overflow
- Offset and Cross handles available
- Custom sizes and finishes available

Connection	1/2" Compression
Valve	1/2" Ceramic
GPM	1.2

800.330.5553 | f 707.789.9201 | info@sonomaforge.com